# HYDRO BEAM XI

## User Instructions

**©2025 ADJ Products, LLC** all rights reserved. Information, specifications, diagrams, images, and instructions herein are subject to change without notice. ADJ Products, LLC logo and identifying product names and numbers herein are trademarks of ADJ Products, LLC. Copyright protection claimed includes all forms and matters of copyrightable materials and information now allowed by statutory or judicial law or hereinafter granted. Product names used in this document may be trademarks or registered trademarks of their respective companies and are hereby acknowledged. All non-ADJ Products, LLC brands and product names are trademarks or registered trademarks of their respective companies.

**ADJ Products, LLC** and all affiliated companies hereby disclaim any and all liabilities for property, equipment, building, and electrical damages, injuries to any persons, and direct or indirect economic loss associated with the use or reliance of any information contained within this document, and/or as a result of the improper, unsafe, insufficient and negligent assembly, installation, rigging, and operation of this product.

**ADJ PRODUCTS LLC World Headquarters**
6122 S. Eastern Ave. | Los Angeles, CA 90040 USA
Tel: 800-322-6337 | Fax: 323-582-2941 | www.adj.com |support@adj.com

**ADJ Supply Europe B.V.**
Junostraat 2 | 6468 EW Kerkrade | Netherlands
Tel: +31 45 546 85 00 | Fax: +31 45 546 85 99 | www.americandj.eu | service@americandj.eu

Europe Energy Saving Notice

Energy Saving Matters (EuP 2009/125/EC)
Saving electric energy is a key to help protecting the environment. Please turn off all electrical products when they are not in use. To avoid power consumption in idle mode, disconnect all electrical equipment from power when not in use. Thank you!

## DOCUMENT VERSION

**Due to additional product features and/or enhancements, an updated version of this document may be available online.**
**Please check www.adj.com for the latest revision/update of this manual before beginning installation and/or programming.**

| Date | Document Version | Software Version | DMX Channels | Notes |
|---|---|---|---|---|
| 08/21/2019 | 1 | 1.0 | 11/14 | Initial Release |
| 10/01/2019 | 1.2 | N/C | No Change | Software Update Instructions Added |
| 12/17/2019 | 1.3 | 1.3 | No Change | Updated Display Lock/Unlock Feature |
| 09/16/2020 | 1.4 | N/C | No Change | Updated Factory Specs |
| 12/09/2020 | 1.5 | N/C | No Change | Corrected DMX Channel Modes |
| 03/02/2021 | 1.6 | N/C | No Change | Updated Dimensional Drawings and Specifications |
| 11/22/2022 | 1.7 | N/C | No Change | Updated IP Notice, Installation, Torque Settings, Specifications; added RDM, Dimmer Curves & Modes, FCC Statement |
| 11/28/2022 | 1.8 | N/C | No Change | Updated System Menu, Specifications; removed FCC Statement |
| 02/24/2023 | 1.9 | N/C | No Change | Update IP65 statement & specifications |
| 05/19/2025 | 2.0 | N/C | No Change | Updated General Information, Discharge Lamp Warnings, Specifications |

# CONTENTS


| | |
|---|---|
| Introduction | 4 |
| Warranty Registration I Key Features | 5 |
| IP Notice | 6 |
| Safety Guidelines | 7 |
| Overview | 10 |
| Discharge Lamp Warning | 11 |
| Lamp Installation | 12 |
| Torque Settings for Screws | 14 |
| Gobos | 16 |
| Installation | 17 |
| Remote Device Management (RDM) | 21 |
| Connections | 22 |
| System Menu | 23 |
| WiFly Control | 27 |
| DMX Setup | 29 |
| DMX Addressing | 30 |
| DMX Traits | 31 |
| Dimmer Curves and Modes | 34 |
| Error Codes | 35 |
| Multiple Power Linking I Cleaning | 36 |
| Specifications | 37 |
| Dimensional Drawings | 38 |

# GENERAL INFORMATION

## INTRODUCTION

Please read and understand the instructions in this manual carefully and thoroughly before attempting to operate this device. These instructions contain important safety and use information.

**This product is intended for use by professionally trained personnel only, and is not suitable for private use.**

## UNPACKING

Every device has been thoroughly tested and has been shipped in perfect operating condition. Carefully check the shipping carton for damage that may have occurred during shipping. If the carton is damaged, carefully inspect the device for damage, and be sure all accessories necessary to install and operate the device have arrived intact. In the event damage has been found or parts are missing, please contact our customer support team for further instructions. Please do not return this device to your dealer without first contacting customer support. Please do not discard the shipping carton in the trash. Please recycle whenever possible.

## CUSTOMER SUPPORT

Contact ADJ Service for any product related service and support needs.
Also visit forums.adj.com with questions, comments or suggestions.

**ADJ SERVICE USA** - Monday - Friday 8:00am to 4:30pm PST
323-582-2650 I Fax: 323-832-2941 I support@adj.com

**ADJ SERVICE EUROPE** - Monday - Friday 08:30 to 17:00 CET
+31 45 546 85 60 I Fax: +31 45 546 85 96 I support@adj.eu

**REPLACEMENT PARTS** please visit parts.adj.com

## LIMITED WARRANTY

For up-to-date warranty information regarding your device, please visit ADJ's warranty information page online or scan the QR codes below:

**https://www.adj.com/warranty-information**

**https://www.adj.eu/terms_and_conditions**

**THERE ARE NO USER SERVICEABLE PARTS INSIDE THIS UNIT. DO NOT ATTEMPT ANY REPAIRS YOURSELF; DOING SO WILL VOID YOUR MANUFACTURER'S WARRANTY. DAMAGES RESULTING FROM MODIFICATIONS TO THIS FIXTURE AND/OR THE DISREGARD OF SAFETY INSTRUCTIONS AND GUIDELINES IN THIS MANUAL VOID THE MANUFACTURER'S WARRANTY AND ARE NOT SUBJECT TO WARRANTY CLAIMS AND/OR REPAIRS.**

# WARRANTY REGISTRATION

Please fill out the enclosed warranty card to validate your purchase. All returned service items, whether under warranty or not, must be freight pre-paid and accompanied by a return authorization (R.A.) number. The R.A. number must be clearly written on the outside of the return package. A brief description of the problem as well as the R.A. number must also be written down on a piece of paper included in the shipping carton. If the unit is under warranty, you must provide a copy of your proof of purchase invoice. You may obtain an R.A. number by contacting our customer support team on our customer support number. All packages returned to the service department not displaying an R.A. number on the outside of the package will be returned to the shipper.

## KEY FEATURES

- IP65 Outdoor Rated for temporary outdoor use only.
- Electronic Dimming 0-100%
- DMX-512 protocol
- 5-Pin DMX Connection
- Multiple DMX Modes
- IP65 Twist Lock Power In & Out
- Colors: 14 + Open (Including CTB&UV)
- Gobos: 15 Gobos+Open
- Prism: Rotating 16-Facet Circular
- Frost Effect
- Multiple Unit Power Linking (see **Power Linking** section of this manual)

**INCLUDED ITEMS:**

- Twist Lock Power Cable (x1)
- Omega Brackets (x2)

# IP65 RATED

**The International Protection (IP)** rating system is commonly expressed as "**IP**" (Ingress Protection) followed by two numbers (i.e. IP65), where the numbers define the degree of protection. The first digit (Foreign Bodies Protection) indicates the extent of protection against particles entering the fixture, and the second digit (Water Protection) indicates the extent of protection against water entering the fixture. An **IP65** rated lighting fixture is designed and tested to protect against the ingress of dust (**6**), and low-pressure water jets from any direction (**5**).

**NOTE: THIS FIXTURE IS INTENDED FOR TEMPORARY OUTDOOR USE ONLY!**

**Maritime/Coastal Environment Installations:** A coastal environment is seaside adjacent, and caustic to electronics through exposure to atomized salt-water and humidity, whereas maritime is anywhere within 5-miles of a coastal environment.

**NOT suitable for maritime/coastal environment installations. Installing this fixture in a maritime/coastal environment may cause corrosion and/or excessive wear to the interior and/or exterior components of the fixture. Damages and/or performance issues resulting from installation in a maritime/coastal environment will void the manufactures warranty, and will NOT be subject to any warranty claims and/or repairs.**

Maritime installations require additional preparation, and additional service intervals may be needed given the maritime use. In general, IP ratings presuppose freshwater conditions VS maritime conditions, which are typically more "caustic" to IP fixtures (both internally and externally). A duty-cycle may also be needed when units are not in use. During times of high humidity and colder temperatures, condensation may occur internally so the fixture may require a duty-cycle to bring it up to running temperature, allowing any accumulation of moisture to be expelled via the vent valve. Recommendations can change based on installation environmental circumstances. A waterproof dome or similar device is recommended for use in permanent outdoor installations. When using a dome, refer to manufacturer recommendations for duty-cycle.

**Exterior Maintenance:** Inspect the exterior every 30-days. The unit must be powered off/disconnected. Inspect optics to determine if the lens is obstructed, then clean optics and chassis accordingly. Based on initial finding, schedule maintenance accordingly, keeping in mind that exterior maintenance will be required. Even if the luminaires are NOT in use, maintenance will still be needed given its location (exterior use). The use of a durable type of wax on the chassis is recommended since it will help prevent contaminant build up. Inspect both power and data lines for any signs of contaminants or corrosion. Periodically reapplying di-electric grease, especially in coastal environments. If any signs of corrosion/contaminants are present, clean thoroughly, and/or replace connectors, then reapply di-electric grease. Typically, this should be done annually, or any time an opportunity presents itself. As a preventive measure, annual replacement of both vent valves is recommended. The vent valve membrane can become contaminated and/or clogged causing improper venting of humidity within the luminaire. Inspect all mounting hardware as a precaution.

**Interior Maintenance:** Inspect the interior every 30-days. The unit must be powered off/disconnected.

- Inspect zoom/focus mechanism, clean optics, lubricate linear bearings (Krytox oil) as needed, inspect belts for wear
- Inspect all rotating effect wheels, manually rotate them, note any resistance
- Inspect all remaining rotating belts for any wear
- Inspect all fans, clean as needed, check rotation, check connections
- Inspect CMY module, manually move flags and check for signs of resistance, and if needed, clean guide rods first, then reapply a thin layer of grease (moly lube)
- Clean interior with low-volume compressed air, then clean optics prior to reassembly of head covers

Although the base has limited moving parts, the pan belt should also be inspected for wear. Remember to always perform an IP test anytime a cover is removed.

There is no specific time frame regarding the routine replacement of parts such as belts/stepper motors, PCBs, or LEDs. These items should only be replaced on an as needed bases, except for cooling fans, which should be replaced once the luminaries reach 10,000-hours. This is a prophylactic measure intended to keep the unit running as cool as possible, insuring proper function of all internal components. A complete service breakdown is available, please contact service@adj.com for any needed parts or manuals.

# SAFETY GUIDELINES

**For Your Own Personal Safety, Please Read and Understand This Manual Completely Before You Attempt To Install Or Operate This Unit!**

- There are no user serviceable parts inside this unit. Do not attempt any repairs yourself, as doing so will void your manufacturer's warranty. Damages resulting from modifications to this fixture and/ or the disregard of safety instructions and guidelines in this manual void the manufacturer's warranty and are not subject to any warranty claims and/or repairs.
- Do not plug the fixture into a dimmer pack! Never open this fixture while in use, and unplug power before perfoming and servicing or maintenance!
- Never touch the fixture during operation, as its surface may be hot! Keep any flammable materials well away from the fixture!
- Ensure all connections and end caps are properly sealed with a dielectric grase (available at most electrical suppliers) to prevent water corrosion and/or electrical short circuit.
- **IF THE FIXTURE HAS BEEN EXPOSED TO ENVIRONMENTAL TEMPERATURE CHANGES, SUCH AS RELOCATION FROM A COLD OUTDOOR ENVIRONMENT TO A WARM INDOOR ENVIRONMENT, DO NOT POWER THE FIXTURE ON IMMEDIATELY. INTERNAL CONDENSATION AS A RESULT OF ENVIRONMENTAL TEMPERATURE CHANGES CAN CAUSE INTERNAL FIXTURE DAMAGE. LEAVE THE FIXTURE POWER OFF UNTIL IT HAS REACHED ROOM TEMPERATURE BEFORE POWERING ON.**
- **NEVER LOOK DIRECTLY INTO THE LIGHT SOURCE! RETINA INJURY RISK - MAY INDUCE BLINDNESS OR CAUSE SENSITIVE PERSONS TO SUFFER EPILEPTIC SHOCK!**
- Replace shields, lenses, or ultraviolet screens if they have become visibly damaged and their effectiveness is impaired, due to cracks, deep scratches, or other damage.
- Change the lamp if it has been damaged or thermally deformed.
- The luminaire is intended for professional use only.
- The light source shall only be replaced by the manufacturer, qualified service agent, or a similar qualified technician.
- Reinforced insulation is located between LV supply and DMX dimming control circuit.
- No insulation located between SELV circuit and DMX dimming control circuit.
- Be sure that the power source is compatible with the required voltage for your unit.
- Do not attempt to operate this unit if the power cord has been frayed or broken.
- Do not attempt to remove or break off the ground prong from the electrical cord. This prong is used to protect against fire risk in the event of an internal short.
- Disconnect from main power before making any type of connection.
- Do not remove the cover for any reason. There are no user serviceable parts inside.
- Never operate this unit with the cover removed.
- Always be sure to mount this unit in an area that will allow proper ventilation. Allow about 7.9" (20cm)between this device and a wall.
- Do not attempt to operate this unit if it has been damaged in any way.
- Always mount this unit in safe and stable matter.
- Power-supply cords should be routed so that they are not likely to be walked on or pinched by items placed upon or against them, paying particular attention to cords at plugs, convenience receptacles, and the point at which they exit from the appliance.
- Cleaning - The fixture should be cleaned only as recommended by the manufacturer.
- Heat - This fixture should be situated away from heat sources such as radiators, heat registers, stoves, or other appliances (including amplifiers) that produce heat.
- The fixture should be serviced by qualified service personnel when the appliance does not appear to operate normally or exhibits a marked change in performance.

# SAFETY GUIDELINES

This fixture is a sophisticated piece of electronic equipment. To guarantee smooth operation, it is important to follow all instructions and guidelines in this manual. ADJ Products, LLC is not responsible for injury and/or damages resulting from the misuse of this fixture due to the disregard of the information printed in this manual. Only qualified and/or certified personnel should perform installation of this fixture, and only the original rigging parts included with this fixture should be used for installation. Any modifications to the fixture and/or the included mounting hardware will void the original manufacturer's warranty and increase the risk of damage and/or personal injury.

**PROTECTION CLASS 1 - FIXTURE MUST BE PROPERLY GROUNDED**

**THERE ARE NO USER SERVICEABLE PARTS INSIDE THIS UNIT. DO NOT ATTEMPT ANY REPAIRS YOURSELF; DOING SO WILL VOID YOUR MANUFACTURER'S WARRANTY. DAMAGES RESULTING FROM MODIFICATIONS TO THIS FIXTURE AND/OR THE DISREGARD OF SAFETY INSTRUCTIONS AND GUIDELINES IN THIS MANUAL VOID THE MANUFACTURER'S WARRANTY AND ARE NOT SUBJECT TO ANY WARRANTY CLAIMS AND/OR REPAIRS.**

**DO NOT PLUG FIXTURE INTO A DIMMER PACK!**
**NEVER OPEN THIS FIXTURE WHILE IN USE!**
**UNPLUG POWER BEFORE SERVICING FIXTURE!**
**MAXIMUM AMBIENT OPERATING TMEPERATURE IS 104°F (40°C)!**
**NEVER TOUCH FIXTURE WITH BARE HANDS DURING OPERATION, AS SURFACE TEMPERATURE DURING OPERATION MAY REACH 167°F (75°C)!**
**KEEP FLAMMABLE MATERIALS AWAY FROM FIXTURE!**

**ENSURE ALL CONNECTIONS AND END CAPS ARE PROPERLY SEALED WITH A DIELECTRIC GREASE (AVAILABLE AT MOST ELECTRICAL SUPPLIERS) TO PREVENT WATER CORROSION AND/OR ELECTRICAL SHORT CIRCUIT.**

**IF THE FIXTURE IS EXPOSED TO ENVIRONMENTAL TEMPERATURE CHANGES, SUCH AS RELOCATION FROM A COLD OUTDOOR ENVIRONMENT TO A WARM INDOOR ENVIRONMENT, DO NOT POWER THE FIXTURE ON IMMEDIATELY. INTERNAL CONDENSATION AS A RESULT OF ENVIRONMENTAL TEMPERATURE CHANGE CAN CAUSE INTERNAL FIXTURE DAMAGE. LEAVE THE FIXTURE POWERED OFF UNTIL IT HAS REACHED ROOM TEMPERATURE BEFORE POWERING ON.**

**NEVER LOOK DIRECTLY INTO THE LIGHT SOURCE!**
**RETINA INJURY RISK - MAY INDUCE BLINDNESS!**
**SENSITIVE PERSONS MAY SUFFER AN EPILEPTIC SHOCK!**

# SAFETY GUIDELINES

**⚠ CAUTION**

**HIGH INTENSITY ULTRAVIOLET LIGHT**

**AVOID DIRECT EYE & SKIN EXPOSURE.**
**WEAR PROPER EYE & SKIN PROTECTION.**
**SEE MANUAL FOR SAFETY INSTRUCTIONS.**

- **RISK GROUP 3 - RISK OF EXPOSURE TO ULTRAVIOLET (UV) RADIATION!**
- **FIXTURE EMITS HIGH INTENSITY WAVELENGTH OF ULTRAVIOLET LIGHT.**
- **WEAR PROPER EYE AND SKIN PROTECTION.**
- **DO NOT OPERATE FIXTURE WITH DAMAGED/MISSING EXTERNAL COVER OR PROTECTIVE LENS.**
- **DO NOT LOOK DIRECTLY INTO THE (UV) LIGHT AND/OR VIEW (UV) LIGHT DIRECTLY WITH OPTICAL INSTRUMENTS THAT MAY CONCENTRATE THE LIGHT/ RADIATION OUTPUT.**
- **AVOID PROLONGED PERIODS OF EXPOSURE.**
- **AVOID WEARING WHITE COLOR CLOTHING AND/OR USING (UV) PAINTS ON SKIN.**
- **AVOID DIRECT EYE AND/OR SKIN EXPOSURE AT DISTANCES SHORTER THAN 11 FEET (3.3 METERS).**
- **INDIVIDUALS SUFFERING FROM A RANGE OF EYE CONDITIONS, SUNLIGHT EXPOSURE DISORDERS, OR INDIVIDUALS USING PHOTOSENSITIVE MEDICATION MAY EXPERIENCE DISCOMFORT IF EXPOSED TO THE ULTRAVIOLET (UV) LIGHT EMITTED FROM THIS FIXTURE.**
- DO NOT TOUCH the fixture housing during operation. Turn OFF the power and allow approximately 15 minutes for the fixture to cool down before servicing.
- DO NOT shake fixture, and avoid brute force when installing and/or operating fixture.
- DO NOT operate fixture if the power cord has become frayed, crimped, damaged and/or if any of the power cord connectors are damaged and do not insert into the fixture securely with ease.
- NEVER force a power cord connector into the fixture. If the power cord or any of its connectors are damaged, replace it immediately with a new one of the same power rating.
- DO NOT block any air ventilation slots, and do NOT allows them to be obstructed by dirt, dust, or other debris. Allow approx. 7.9” (20cm) between the fixture and other devices or a wall for proper cooling.
- When installing fixture in a suspended environment, always use mounting hardware that is no less than M10 x 25 mm, and always attach an appropriately rated safety cable.
- ALWAYS disconnect fixture from main power source before performing any type of service and/or cleaning procedure.
- Only handle the power cord by the plug end, and never pull out the plug by tugging the wire portion of the cord.
- During the initial operation of this fixture, a light smoke or smell may emit from the interior of the fixture. This is a normal process and is caused by excess paint in the interior of the casing burning off from the heat associated with the lamp and will decrease gradually over time.
- Consistent operational breaks will ensure fixture will function properly for many years.
- ONLY use the original packaging and materials to transport the fixture in for service.

# OVERVIEW

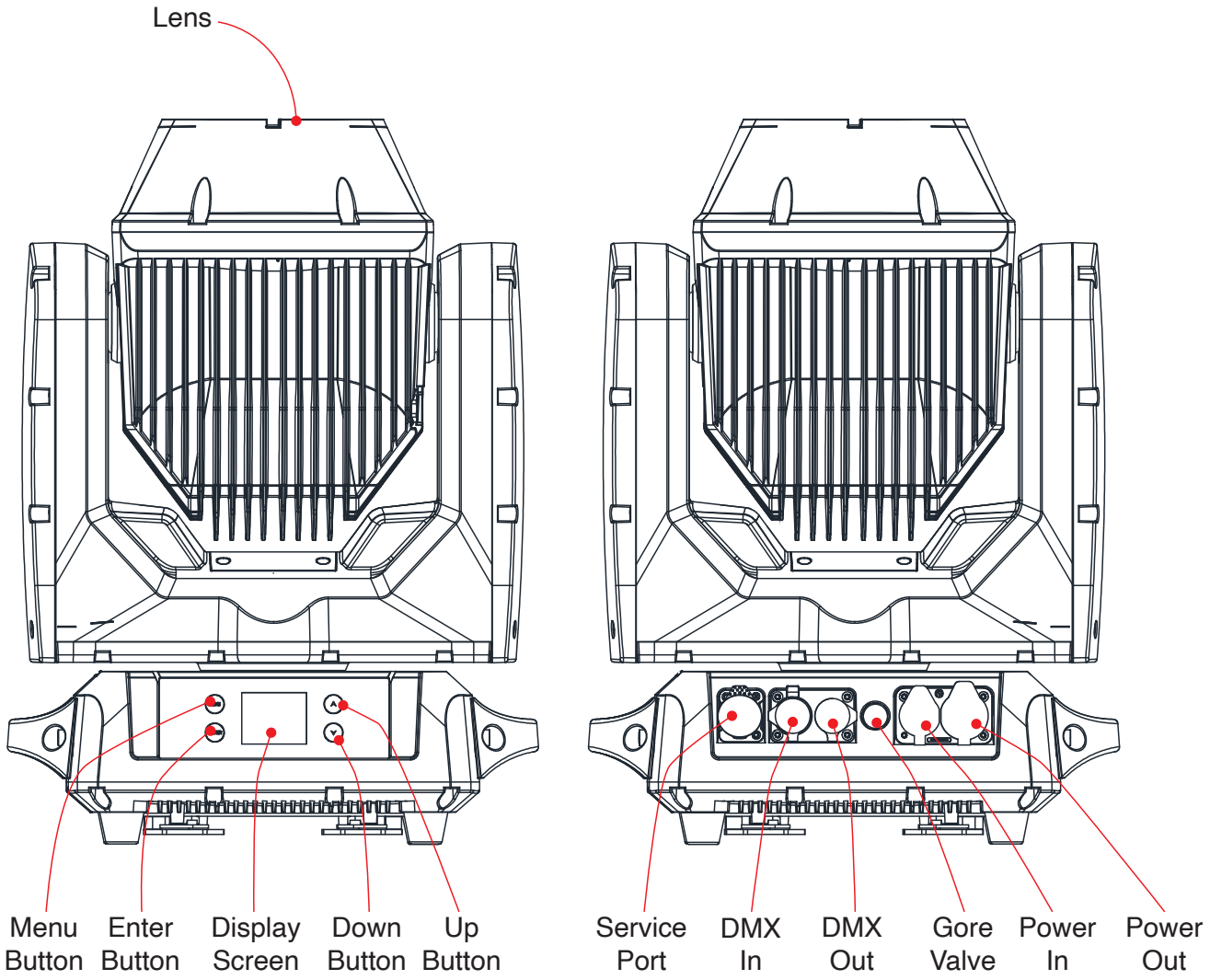
Lens
Menu Button
Enter Button
Display Screen
Down Button
Up Button
Service Port
DMX In
DMX Out
Gore Valve
Power In
Power Out

# DISCHARGE LAMP WARNING

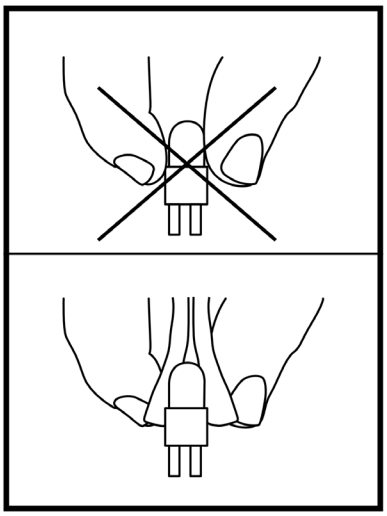

**This fixture is fitted with a DISCHARGE LAMP, which is highly susceptible to damage if improperly handled. NEVER touch the lamp with your bare hands, as the oil from your hands will shorten the life of the lamp. NEVER move the fixture until the lamp has had ample time to cool. Lamps are NOT covered under warranty conditions. Avoid switching the fixture ON and OFF repeatedly in short intervals, as this will reduce lamp life and intensity.**

**To achieve the intensity associated with discharge lamps, these lamps use gas sealed in a high-pressure environment to emit a brilliant output. Due to the high pressure involved with the construction of the lamp, the lamp MAY EXPLODE DURING PROLONGED EXTENSIVE USE. This risk is increased with age, and therefore additional care is encouraged when dealing with older lamps. The lamp must always be replaced at the end of its recommended duty cycle. Extreme caution should be used when operating this or any fixture fitted with a gas discharge lamp.**

**UV RADIATION NOTICE**

This fixture emits intense UV radiation, which is harmful to the eyes and skin. The intense luminescence of the lamp can cause severe damage to the retina. NEVER operate this fixture with ANY of the protective covers removed. These covers have been specially designed to shield against UV radiation.

**LAMP REPLACEMENT WARNING**

**Use only an Osram Sirius HRI 100W lamp (ADJ order code ZB-1R) for replacement! Do not replace with a lamp of any other make or model type!**

**NOTE**: The lamp life is represented in "**Percentages**".

**When the lamp reaches 15% life remaining, the unit's display will flash the following message: "Replace The Lamp Soon".** This message will flash for up to 10 minutes. To confirm this warning and return to normal operation, press the **ENTER** button.

**When the lamp reaches 10% life remaining, the unit's display will again flash the following message: "Replace The Lamp Soon".** This message will flash for up to 10 minutes. To confirm this warning and return to normal operation, press the **ENTER** button.

**NOTE**: When the fixture is powered **OFF** and then back **ON** again, the fixture display will flash the following message: "**Replace The Lamp Soon**".

**When the lamp reaches 0% to 5% life remaining, the unit's display will flash the following message: "Replace The Lamp Immediately". The unit will now NO longer respond to DMX commands, and it will enter hibernation mode.** This will disable all fixture functionality with the exception of a few menu commands. The fixture will continue to enter into hibernation mode when powered on until the lamp is replaced and the lamp time (LAMP ON TIME-R) has been reset, as detailed in the **System Menu** section of this manual.

**NOTE**: After replacing the lamp, the lamp time **MUST** be reset. The lamp time must be reset to gain access to the full system menu.

# LAMP INSTALLATION

**WARNING! LAMP REPLACEMENT SHOULD ONLY BE DONE BY A TRAINED TECHNICIAN.**

1. Turn OFF power and allow approximately 15 minutes for the fixture to cool down.

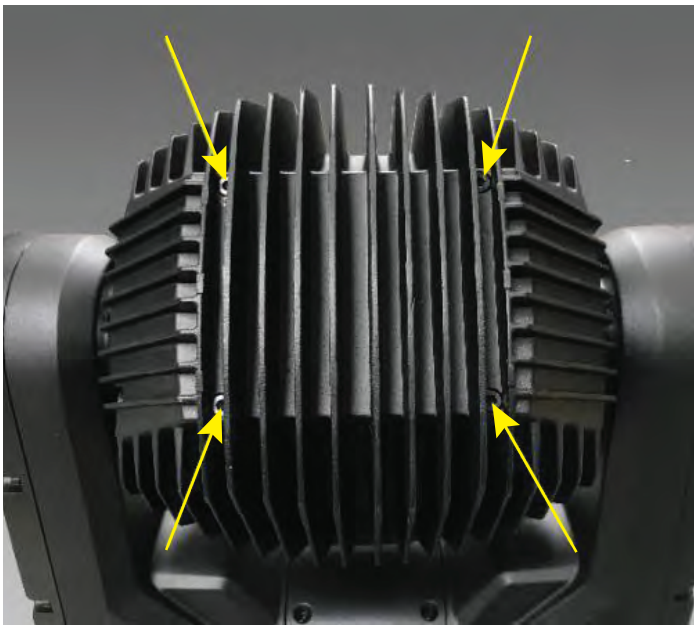

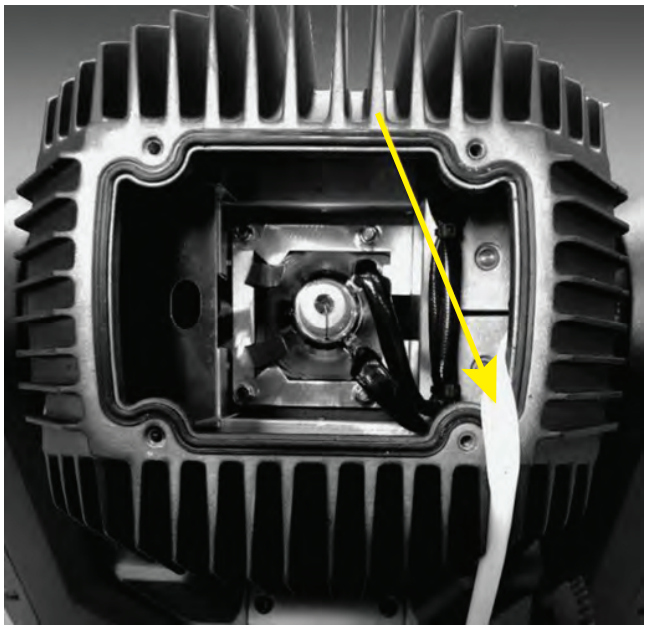

2. Unscrew the (4x) allen head screws, then remove the rear cover. Please be advised that the cover is connected to the unit via a safety cable and connected wire cable.

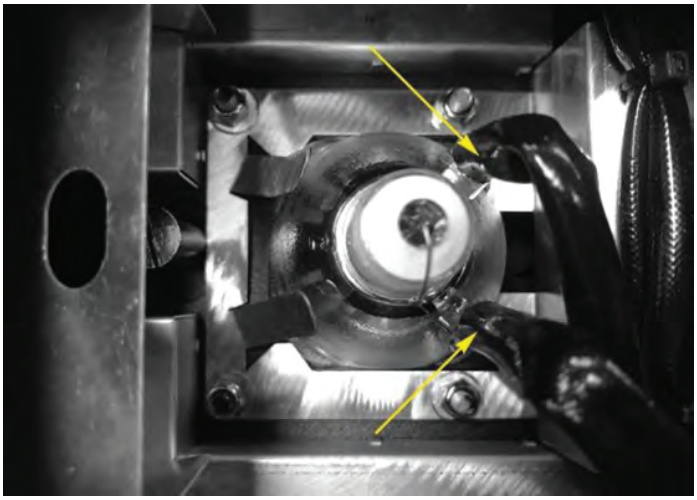

3. Gently remove the (2) spade terminals connected to the lamp.

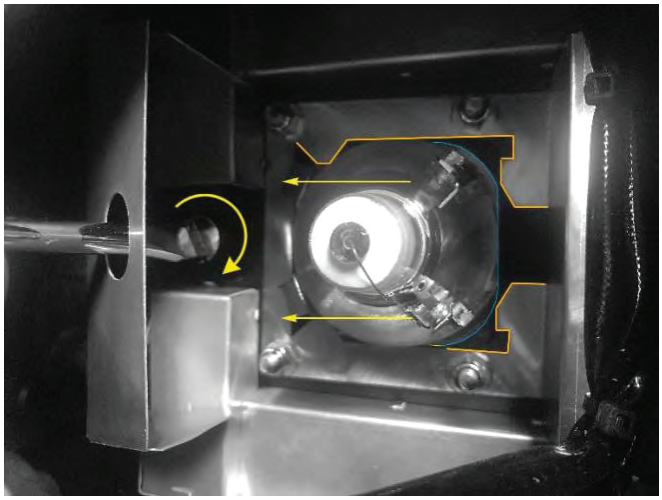

4. Use a flat head screwdriver to turn the lamp centering screw clockwise until the lamp slides out of its holder on the right side.

# LAMP INSTALLATION

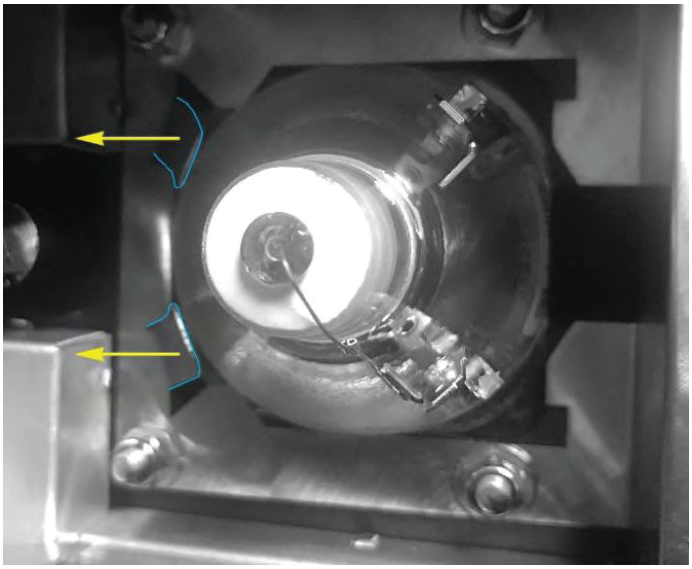

5. Using your fingers, gently pull back the (2) lamp holders, then carefully slide the lamp to the right and out.
6. Slide the new lamp into its socket by pulling it leftwards against the (2) lamp holders. Use a flat head screwdriver and turn the lamp centering screw counter-clockwise to its original position.
7. Reconnect the (2) spade terminals to the lamp, then replace the cover and tighten the (4) allen head screws to secure the cover in place.

# TORQUE SETTINGS FOR SCREWS

**ALL SCREWS MUST BE TIGHTENED WITH A TORQUE DRIVER.** All screws are Allen Head screws. Please refer to the illustration and table below for screw locations, screw quantity, and torque settings. The number listed in the “#” column corresponds to the location on the fixture.

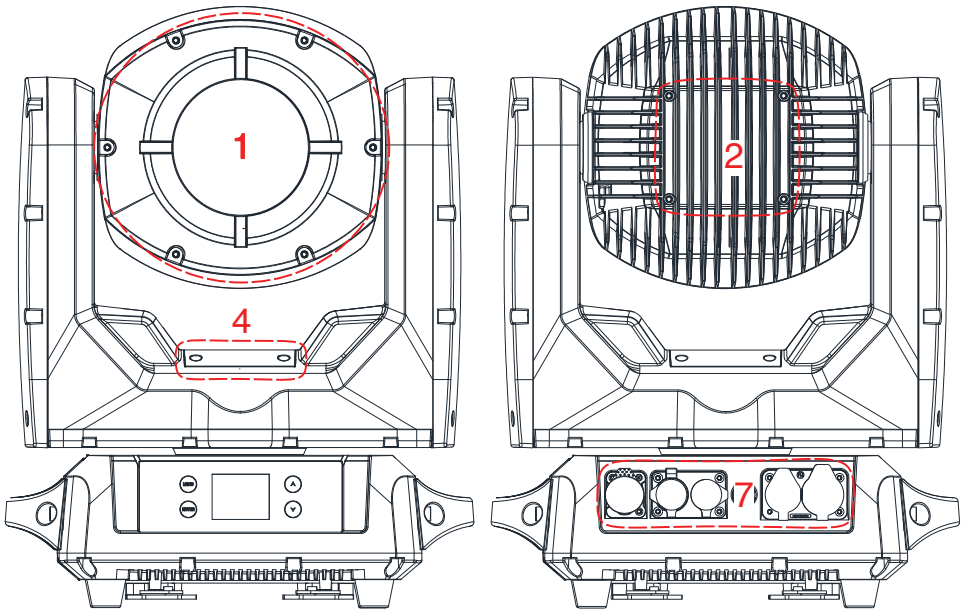


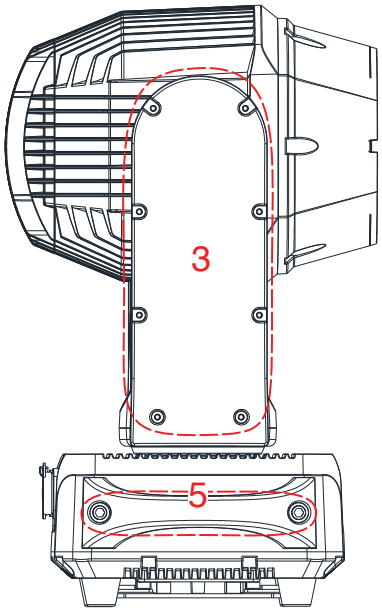


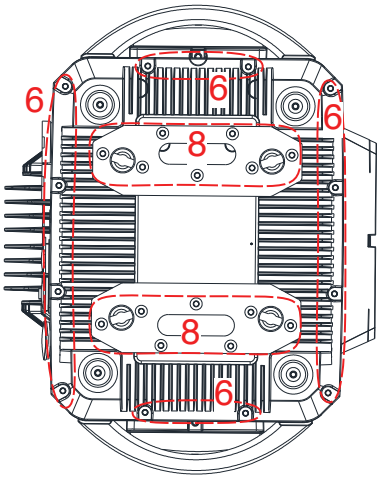


| | | |
|---|---|---|
| 1 | Lens Assembly to Head Casting (x14) | 6.5 - 8.7 In-Lb / 3mm Hex |
| 2 | Lamp Cover to Head Casting (x4) | 6.7 - 9.6 In-Lb / 4mm Hex |
| 3 | Plastic Head Cover to Head Casting (4 x each side = 8 total) | 6.5 - 8.7 In-Lb / 3mm Hex |
| 4 | Yoke Arm Cover to Yoke Frame (11 x each side = 22 total) | 6.5 - 8.7 In-Lb / 3mm Hex |
| 5 | Access Cover to Yoke Frame (x4) | Manual Screwdriver / 3mm Hex |
| 6 | Bottom Cover to Base Casting (x16) | 6.7 - 9.6 In-Lb / 3mm Hex |
| 7 | Power and Data Connector to Base Casting (x8) | 6.5 - 8.7 In-Lb / Torx T8 |
| 8 | 1/4 Turn Adapter Plate to Bottom Cover (x16) | 6.5 - 8.7 In-Lb / 3mm Hex |

# TORQUE SETTINGS FOR SCREWS

**ALL SCREWS MUST BE TIGHTENED WITH A TORQUE DRIVER.** All screws are Allen Head screws. Please see below for screw locations.

**CAUTION! DO NOT OVER TORQUE SCREWS AS THIS CAN CAUSE LEAKAGE ISSUES! TO CONFIRM THE IP65 INTEGRITY AFTER MAINTENANCE, TEST THE FIXTURE USING THE ADJ IP TESTER. CONTACT ADJ SERVICE FOR MORE DETAILS.**

**IF IN THE UNLIKELY EVENT THAT A PRESSURIZED FIXTURE RESULTS IN CATASTROPHIC LENS FAILURE, EYE PROTECTION MUST BE WORN AT ALL TIMES WHEN USING ADJ IP TESTER, ESPECIALLY WITH FIXTURES FEATURING LARGE GLASS LENSES. ALSO, TO PROTECT HANDS FROM ANY SHARP FRANGIBLE MATERIAL, THE USE OF CUT RESISTENT GLOVES IS ALSO HIGHLY RECOMMENDED.**

**TORQUE DRIVERS (Recommended): UTICA TS-30 (Shown)**

**ALTERNATIVE DRIVERS:**
**Proto J6107A**
**Wiha 28887**

| IP PRESSURE TESTING PARAMETERS | | |
|---|---|---|
| **Low Pressure Limit** | **High Pressure Limit** | **Steady/Hold Time** |
| 2.9 psi (20 KPa) | 3.3 psi (23 KPa) | 15 sec |

## GOBOS

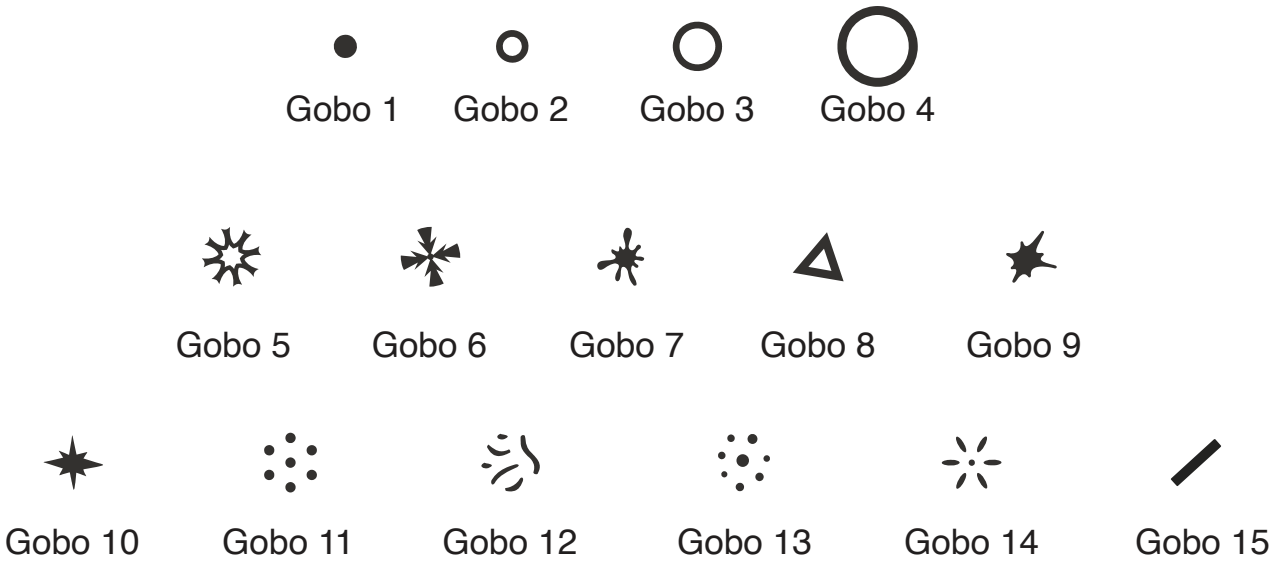
Gobo 1
Gobo 2
Gobo 3
Gobo 4
Gobo 5
Gobo 6
Gobo 7
Gobo 8
Gobo 9
Gobo 10
Gobo 11
Gobo 12
Gobo 13
Gobo 14
Gobo 15

# INSTALLATION

**FLAMMABLE MATERIAL WARNING**
**Keep fixture at least 0.7 feet (0.2m) away from any flammable materials, decorations, pyrotechnics, etc.**

**ELECTRICAL CONNECTIONS**
**A qualified electrician should be used for all electrical connections and/or installations.**

**MINIMUM DISTANCE TO OBJECTS/SURFACES MUST BE 26 FEET (8 METERS)**

**MAXIMUM TEMPERATURE OF EXTERNAL SURFACE 167°F (75°C)**

**DO NOT INSTALL THE FIXTURE IF YOU ARE NOT QUALIFIED TO DO SO!**

**FIXTURE IS INTENDED FOR TEMPORARY OUTDOOR USAGE ONLY!**

Fixture MUST be installed following all local, national, and country commercial electrical and construction codes and regulations. Before rigging/mounting the fixture to any metal truss/structure or placing the fixture on any surface, a professional equipment installer MUST be consulted to determine if the metal truss/structure or surface is properly certified to safely hold the combined weight of the fixture, clamps, cables, and accessories.

Overhead fixture installation must always be secured with a secondary safety attachment, such as an appropriately rated safety cable that meets all local, national, and country codes and regulations.

Fixture ambient operating temperature range is **-25º to 104ºF (-10º to 40ºC).** Do not use this fixture when ambient temperature falls outside of this range.

Fixture should be installed in areas outside walking paths, seating areas, or away from areas were unauthorized personnel might reach the fixture by hand.

NEVER stand directly below the fixture when rigging, removing, or servicing, and allow approximately 15 minutes for the fixture to cool down before servicing.

# INSTALLATION

Screw one clamp via a M12 screw and nut into the Omega holder. Insert the quick-lock fasteners of the Omega holder into the matching holes of the adjustable mounting bracket. Tighten the quick-lock fasteners fully clockwise. Pull the safety-cable through the opening located on the bottom of the unit and over the trussing system or a safe fixation spot. Insert the end in the carabine and tighten the safety screw.

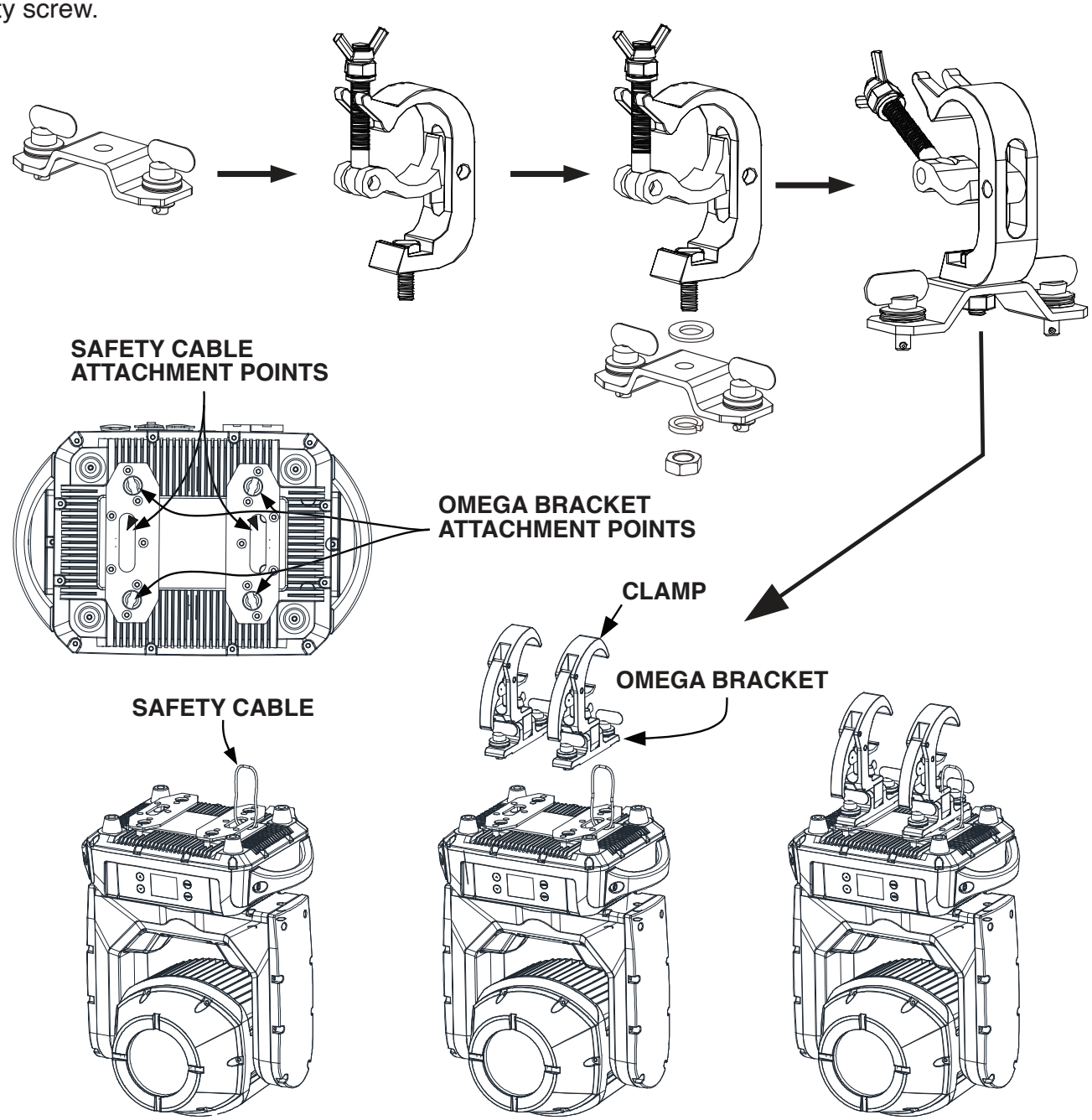


**SAFETY CABLE:**
**ALWAYS ATTACH A SAFETY CABLE WHENEVER INSTALLING THIS FIXTURE IN A SUSPENDED ENVIRONMENT TO ENSURE THAT THE FIXTURE WILL NOT FALL IF THE CLAMP FAILS.**

# INSTALLATION

## RIGGING

Overhead rigging requires extensive experience, including but not limited to: calculating working load limits, understanding the installation material being used, and periodic safety inspection of all installation material and the fixture itself. If you lack these qualifications, do not attempt to perform the installation yourself. Improper installation can result in bodily injury.

The installation should be inspected by skilled personnel at least once per year.

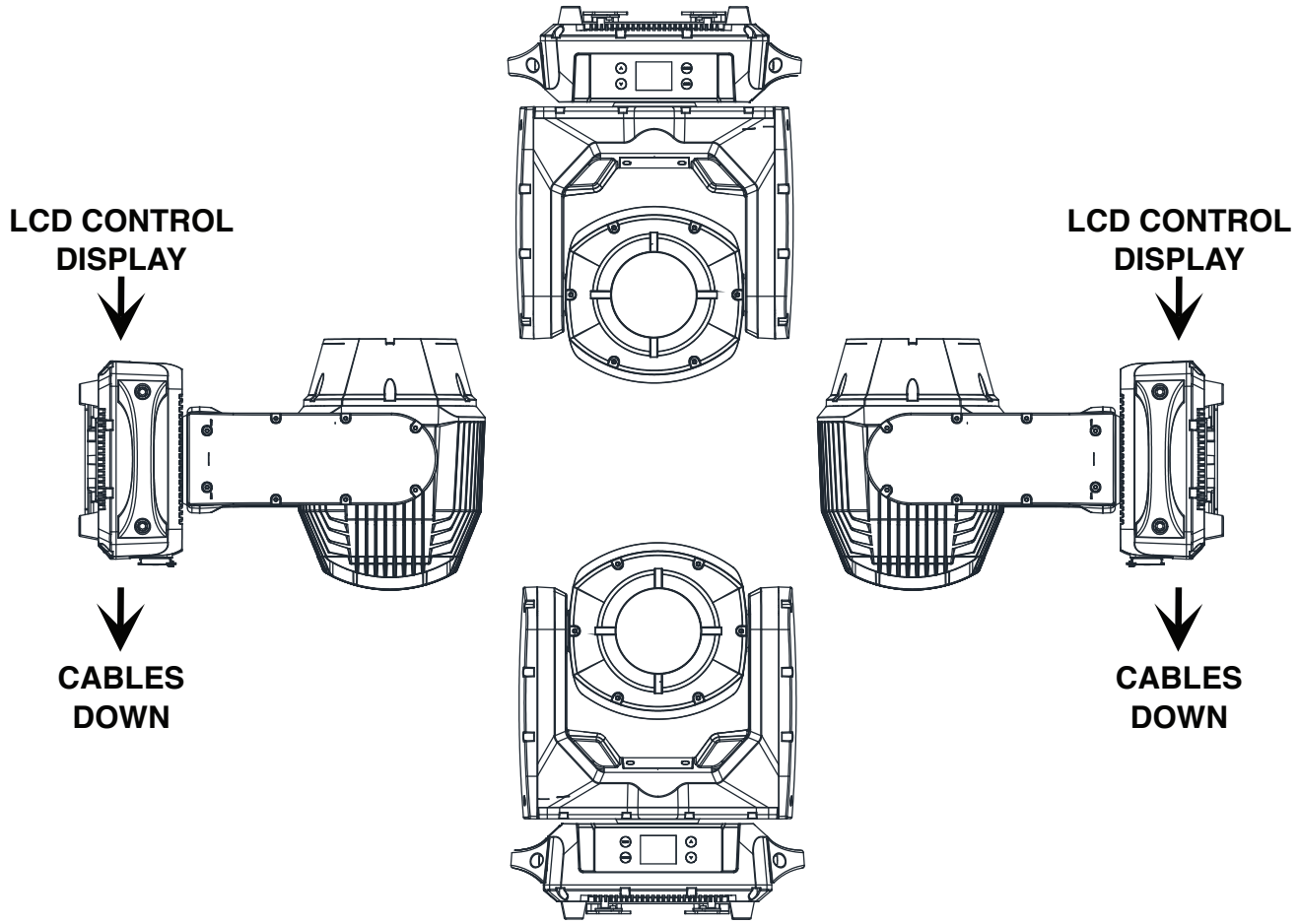


**SIDE MOUNTING:**
**TO MAINTAIN IP65 RATING INTEGRITY, THE FIXTURE MUST BE INSTALLED WITH CABLES FACING TOWARDS THE GROUND AT ALL TIMES. WATER MUST EASILY RUN OFF AND MUST NOT ACCUMULATE AROUND CABLE CONNECTION POINTS.**

The Hydro Beam X1 is fully operational in three different mounting positions: hanging upside-down, mounted sideways on trussing, or set on a flat level surface. Be sure this fixture is kept at least 0.2m or 0.7ft away from any flammable materials. Always use and install the supplied safety cable as a safety measure to prevent accidental damage and/or injury in the event the clamp fails. Never use the carrying handles for secondary attachment.

# INSTALLATION

**SUNLIGHT PROTECTION**

External sources of light beams from direct sunlight, lighting moving head fixtures, and lasers, which are focused directly towards the exterior housing and/or penetrate the front lens opening of ADJ lighting fixtures, can cause severe internal damage including burning to optics, dichroic color filters, glass and metal gobos, prisms, animation wheels, frost filters, iris, shutters, motors, belts, wiring, discharge lamps, and LEDs.

This issue is not specific only to ADJ lighting fixtures. Rather, it is a common issue with lighting fixtures from all manufacturers. Although there is no true way to fully prevent this issue from happening, the guidelines below can prevent any potential damage from occurring if followed. Contact ADJ Service for more details.

**DO NOT EXPOSE THE FIXTURE AND/OR FRONT LENS OPENING TO LIGHT BEAMS FROM DIRECT SUNLIGHT, OTHER LIGHTING MOVING HEAD FIXTURES, AND LASERS WHILE UNPACKING, INSTALLATION, USE, AND EXTENDED IDLE TIMES OUTDOORS. DO NOT FOCUS A LIGHT BEAM FROM ONE LIGHTING FIXTURE DIRECTLY TOWARDS ANOTHER.**

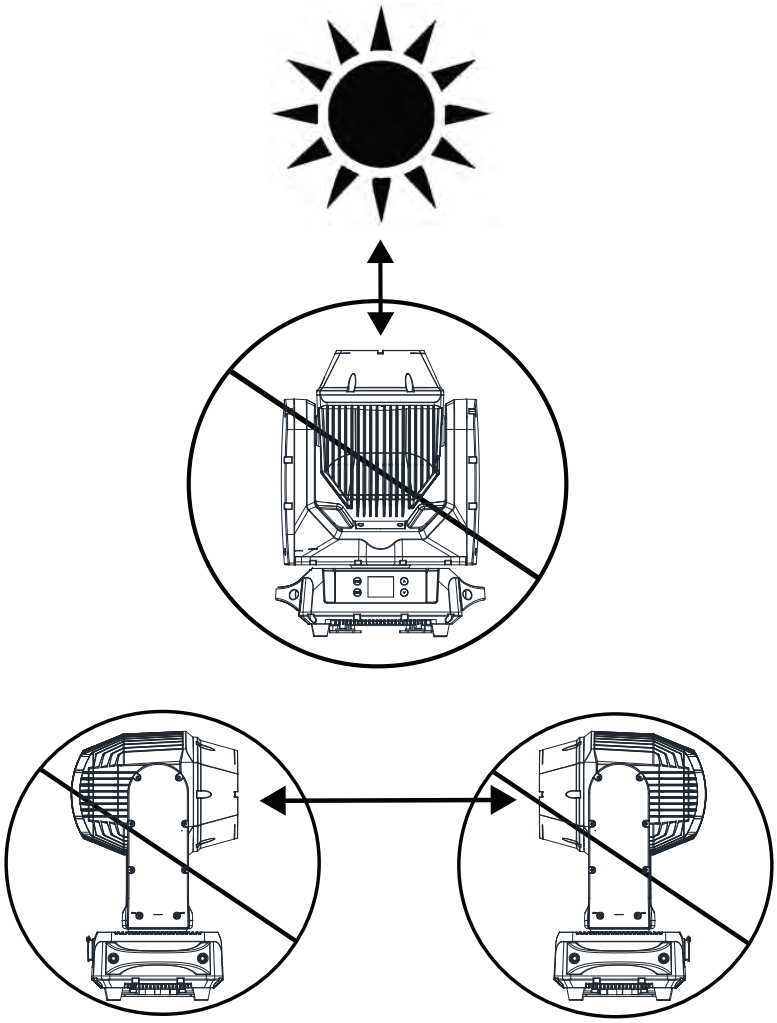

# REMOTE DEVICE MANAGEMENT (RDM)

***NOTE: In order for RDM to work properly, RDM enabled equipment must be used throughout the entire system, including DMX data splitters and wireless systems.***

Remote Device Management (RDM) is a protocol that sits on top of the DMX512 data standard for lighting, allowing the DMX systems of the device to be managed, modified, and monitored remotely (hence, remote device management). This protocol is ideal for fixtures installed in locations that are not easily accessible.

With RDM, the DMX512 system becomes bi-directional, allowing a compatible RDM enabled controller to send out a signal to devices on the wire, as well as allowing the fixture to respond (known as a GET command). The controller can then use it's SET command to modify settings that would typically have to be changed or viewed directly via the unit's display screen, including the DMX Address, DMX Channel Mode, and Temperature Sensors.

**FIXTURE RDM INFORMATION:**

| RDM Code | Device ID | Device Model ID | Personality ID |
|---|---|---|---|
| 0x1900 | Random | 0x047A | 0x0102 (11Ch)<br>0x0202 (14Ch) |

***Please be aware that not all RDM devices support all RDM features,*** and therefore it is important to check beforehand to ensure that the equipment that you are considering includes all of the features that you require.

The following parameters are accessible in RDM on this device:

| | |
|---|---|
| Disc Unique Branch | Status ID Description |
| Disc Mute | Clear Status ID |
| Disc Unmute | Product Detail ID List |
| Device Info | Manufacturer Label |
| Supported Parameters | Device Label |
| Software Version Label | DMX Personality |
| DMX Start Address | DMX Personality Description |
| Identify Device | Device Hours |
| Device Model Description | Pan Invert |
| Comms Status | Tilt Invert |
| Queued Message | Reset Device |
| Status Messages | |

# CONNECTIONS

**ENSURE ALL CONNECTIONS AND END CAPS ARE PROPERLY SEALED WITH A DIELECTRIC GREASE (AVAILABLE AT MOST ELECTRICAL SUPPLIERS) TO PREVENT WATER CORROSION AND/OR ELECTRICAL SHORT CIRCUIT.**

**TO MAINTAIN IP65 RATING INTEGRITY AND PREVENT WATER FROM ENTERING THE FIXTURE, ALL CONNECTION RUBBER CAPS MUST BE SEALED WHEN NOT IN USE.**

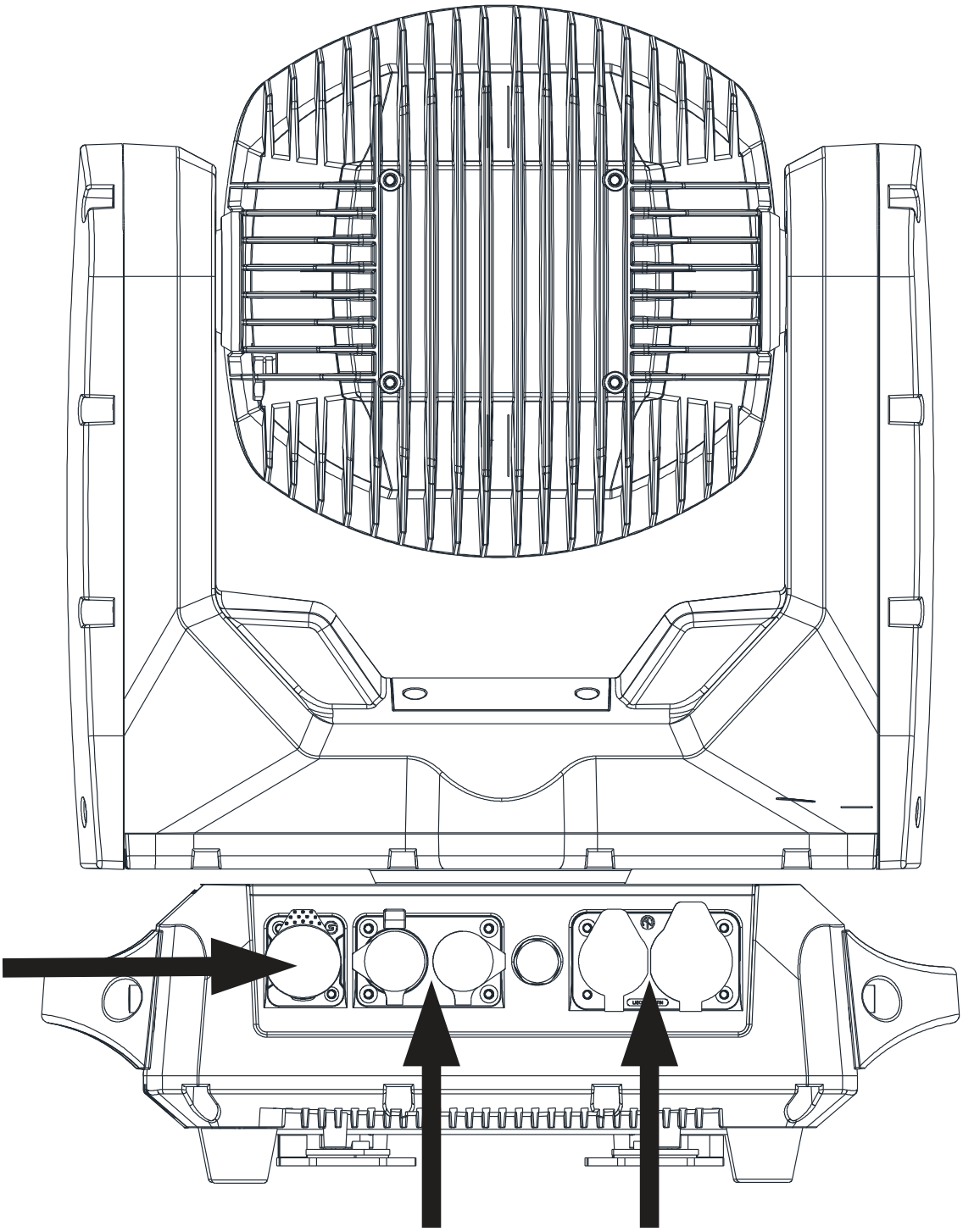

# SYSTEM MENU

The fixture includes an easy to navigate system menu control panel display where all necessary settings and adjustments are made. During normal operation, pressing the MENU button once will access the fixture's main menu. Once in the main menu, you can navigate through the different functions and access the sub-menus with the UP and DOWN buttons. When you reach a field that requires adjusting, press the ENTER button to access that field, and use the UP and DOWN buttons to adjust the field. Pressing the ENTER button once more will confirm your setting. You may exit the main menu at any time without making any adjustments by pressing the MENU button.

**SYSTEM LOCK/UNLOCK:** When the display lock function is activated, the display and system menu will lock after 10 seconds of inactivity. To UNLOCK the display, press and HOLD the MENU button for 10+ seconds. While pressing the MENU button, a timer will appear at the bottom of the display, indicating the passing seconds from 0-9. Once the timer reaches 9 seconds, the display will unlockm, allowing access to the system menu.

**DO NOT RELEASE THE MENU BUTTON UNTIL THE DISPLAY IS UNLOCKED**. If the **MENU** button is released before the timer reaches 9 seconds and/or is unlocked, the display will not unlock and the time will be reset.

**NOTE:** The timer will not appear in the display if the lock function is disabled.

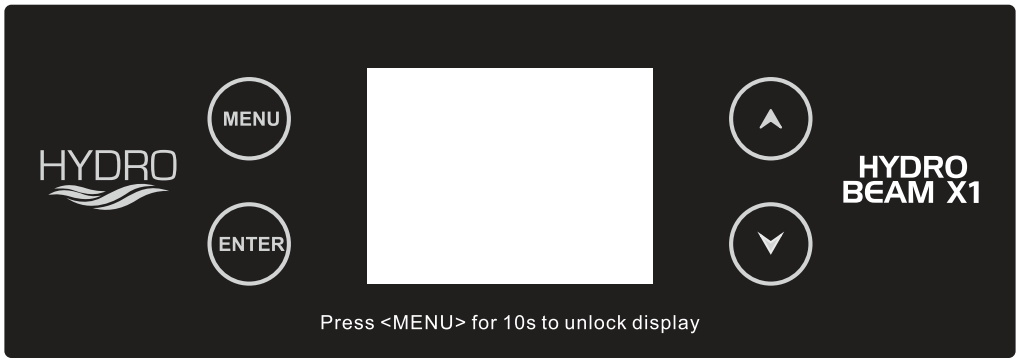

# SYSTEM MENU

| | | | | |
|---|---|---|---|---|
| **DMX SETTINGS** | DMX Address | 001 - XXX | | DMX addressing |
| | DMX Ch Mode | 11 Ch / **14 Ch** | | DMX channel mode selection |
| | No DMX Status | **Hold Last** | | DMX lost status |
| | | Blackout | | |
| | | Manual | | |
| **PERSONALITY** | Select Signal | DMX | | Control via DMX |
| | | WiFly | | Control via WiFly |
| | | WiFly and DMX Out | | Control via WiFly and send DMX Out via DMX cable |
| | Status Settings | Pan Invert | On / **Off** | Reverse pan motion |
| | | Tilt Invert | On / **Off** | Reverse tilt motion |
| | | P/T Feedback | On / **Off** | Pan/tilt movement feedback |
| | | Pan Degree | 540 | Pan degree |
| | | P/T Speed | **Speed 1** / Speed 2 | Pan/tilt movement speed |
| | | Hibernation | Off, 01m - 99m | Sleep setting inactive time, default = **15m** |
| | WiFly Settings | Set WiFly Channel | **00** - 14 | Set WiFly wireless channel |
| | | **Enable** / Disable WiFly | | Activate or deactivate WiFly |
| | Reset Motors | Reset All Motors | Yes / **No** | Reset all motors |
| | | Pan / Tilt Rest | Yes / **No** | Reset pan & tilt motors |
| | | Color Reset | Yes / **No** | Reset color wheel motor |
| | | Gobo Reset | Yes / **No** | Reset gobo wheel motor |
| | | Prism / R-P Reset | Yes / **No** | Reset prism motors |
| | | Shutter Reset | Yes / **No** | Reset shutter motor |
| | | Frost Reset | Yes / **No** | Reset frost motor |
| | Display | Intensity | 1 - **10** (dimmest to brightest) | Display brightness |
| | | Display Invert | Yes / **No** | Display readout inversion |
| | | Screen Saver Delay | **Off** - 10min | Display shutoff time |
| | | Display Lock On/Off | On / **Off** | Display lock |
| | Service Passcode = 050 | Calibration (passcode = 050) | | Calibration adjustment |
| | | USB Port Power | On / **Off** | USB port activation |
| | | Update Software | | Software update |
| | | Factory Restore | Yes / No | Restore factory settings Passcode = 011 |

# SYSTEM MENU

| | | | | |
|---|---|---|---|---|
| **MANUAL CONTROL** | Pan | 000 - 255 | | Manual control |
| | Tilt | 000 - 255 | | |
| | Gobo | 000 - 255 | | |
| | Color | 000 - 255 | | |
| | Prism | 000 - 255 | | |
| | RPrism | 000 - 255 | | |
| | Shutter | 000 - 255 | | |
| | Dimmer | 000 - 255 | | |
| | Frost | 000 - 255 | | |
| **INFORMATION** | Fixture Life Time | Power On Time | xxxxxx Hours | Total running time, not resettable |
| | | P-On Time-R | xxxxxx Hours | Total running time, resettable |
| | | P-On Time Reset | Passcode = 050 | Reset P-On Time-R |
| | Total Lamp Time | Lamp On Time | xxxxxx Hours | Lamp on time, not resettable |
| | | Lamp On Time-R | xxxxxx Hours | Lamp on time, resettable |
| | | Lamp On Time Reset | Passcode = 050 | Reset Lamp On Time-R |
| | Fixture Temps | Head | Current<br>xxx F / xxx C | Current head temperature |
| | | | Max Resettable<br>xxx F / xxx C | Maximum temperature(1) reached, resettable |
| | | | Max Not Resettable<br>xxx F / xxx C | Maximum temperature(2) reached, not resettable |
| | | Base | Current<br>xxx F / xxx C | Current vase temperature |
| | | | Max Resettable<br>xxx F / xxx C | Maximum temperature(1) reached, resettable |
| | | | Max Not Resettable<br>xxx F / xxx C | Maximum temperature(2) reached, not resettable |
| | | Reset Head Temp | Yes / No<br>Passcode = 050 | Reset head temperature (max resettable) |
| | | Reset Base Temp | Yes / No<br>Passcode = 050 | Reset base temperature (max resettable) |
| | Humidity | Head Humidity | xxx % | Current head humidity |
| | | Base Humidity | xxx % | Current base humidity |
| | Fan Info (RPM) | Lamp Fan | xxx | Lamp fan speed |
| | | Head Fan 1 | xxx | Head fan speed |
| | | Head Fan 2 | xxx | Head fan speed |
| | | Head Fan 3 | xxx | Head fan speed |
| | | Head Fan 4 | xxx | Head fan speed |
| | | Base Fan | xxx | Base fan speed |
| | DMX Values(3) | Pan / Pan Fine / Tilt / Tilt Fine / Color / Gobo / Prism / RPrism / Shutter / Dimmer / Dimmer Fine / Frost / P/T Speed / Spe Func | | Show current DMX value |

# SYSTEM MENU

| | | | | |
|---|---|---|---|---|
| **INFORMATION (continued)** | Error Logs | Fixture Errors | | Lists last 10 error codes |
| | | Reset Error Log | Yes / No<br>Passcode = 050 | Clear error log |
| | Software Version | Vx.xx | | Current software version |
| **LAMP CONTROL** | Lamp On / Off | On / **Off** | | Lamp on/off |
| | Lamps On with Power | On / **Off** | | Switch lamp on automatically when fixture is powered on |
| | Lamp On via DMX | **On** / Off | | Lamp power on via DMX control |
| | Lamp Off via DMX | **On** / Off | | Lamp power off via DMX control |

Notes:
1. Current Maximum Temperature - Maximum fixture temp. that has been recorded, before reset and after reset.
2. Maximum Temperature - Overall maximum fixture temp. that has been recorded. (Not Resettable)
3. DMX Value options depend on the DMX Channel mode the fixture is set to.

# WIFLY CONTROL

**BEFORE SETTING THE WIRELESS CHANNEL ON ANY WIFLY FIXTURE, MAKE SURE THE SOURCE WIFLY WIRELESS DMX TRANSCEIVER DEVICE IS OFF.**

With this feature you are able to control the unit with DMX without relying on XLR cables. Your DMX controller must be connected to an ADJ WiFly Transceiver to use this function. Maximum range is 2500 feet/760 meters (open line of sight).

1. Ensure the source WiFly wireless DMX Transceiver device is powered **OFF**.
2. Power **ON** the fixture. Use the control panel to scroll to the **PERSONALITY** menu and press **ENTER**. Use the **UP** and **DOWN** buttons to highlight the **WIFLY SETTINGS** submenu and press **ENTER**.
3. Using the **UP** and **DOWN** buttons, highlight **ENABLE/DISABLE WIFLY**. Press the **ENTER** button to toggle between **ENABLE & DISABLE**. Press **ENTER** so that "**ENABLE**" is displayed.
4. Highlight **SET WIFLY CHANNEL** and press **ENTER**. Use the **UP** and **DOWN** buttons to find your desired WiFly address and press **ENTER** to confirm. Selectable WiFly channels range from 0 - 14.
   - NOTE: Erratic fixture movement may occur if other WiFly wireless DMX products are operating in the immediate area and are using the same WiFly wireless channel. In these cases, your fixture may respond to the DMX wireless signal from another WiFly wireless DMX Transceiver. Please make note of any nearly WiFly devices and the channels they are operating on, and set up your device accordingly.
5. Press the **MENU** button to exit out of the **WIFLY SETTINGS** submenu. Press the **UP** button so that **SELECT SIGNAL** is highlighted, then press **ENTER**. Press the **DOWN** button to highlight **WIFLY** and press **ENTER**. Select **YES** and press **ENTER** to confirm.
6. Set your desired DMX address in the **DMX ADDRESS** submenu of the **DMX SETTINGS** main system menu. Set your desired DMX channel mode in the **DMX CH MODE** submenu of the **DMX SETTINGS** main system menu.
7. Repeat this process for all WiFly compatible fixtures in the WiFly wireless network, making sure all fixtures are assigned the same WiFly wireless channel.
8. After all fixtures in the WiFly wireless network have been set to the same WiFly wireless channel and powered **ON**, power **ON** the source WiFly DMX Transceiver device.
9. Test all fixtures connected to the WiFly wireless network to confirm proper functionality.

# WIFLY CONTROL

**WIRELESS WIFLY INSTALLATION LOCATION GUIDELINES**

Wireless DMX signal can penetrate walls, glass, metal, and most other objects, but there are many factors, that can affect and/or interrupt the wireless DMX signal. One notable example is a person standing in the path of the signal. Therefore, it is highly recommended to position the wireless antenna a minimum of 9.8 ft. (3m) above audiences and/or above ground level. Careful planning and testing of the selected installation location is critical to ensure optimum and reliable wireless DMX operation.

# DMX SETUP

**DMX-512:** DMX is short for Digital Multiplex. This is a universal protocol used as a form of communication between intelligent fixtures and controllers. A DMX controller sends DMX data instructions from the controller to the fixture. DMX data is sent as serial data that travels from fixture to fixture via the DATA "IN" and DATA "OUT" XLR terminals located on all DMX fixtures (most controllers only havea DATA "OUT" terminal).

**DMX Linking:** DMX is a language allowing all makes and models of different manufacturers to be linked together and operate from a single controller, as long as all fixtures and the controller are DMX compliant. To ensure proper DMX data transmission, try to use the shortest cable path possible when using linking DMX fixtures. The order in which fixtures are connected in a DMX line does not influence the DMX addressing. For example, a fixture assignedaDMX address of 1 may be placed anywhere in a DMX line: at the beginning, at the end, or anywhere in the middle. When a fixture is assigned a DMX address of 1, the DMX controller knows to send DATA assigned to address 1 to that unit, no matter where it is located in the DMX chain.

**Data Cable (DMX Cable) Requirements (For DMX Operation):** This fixture can be controlled via DMX-512 protocol. Your unit and your DMX controller require a 5-pin XLR connector for data input and data output. We recommend Accu-Cable DMX cables. If you are making your own cables, be sure to use standard 110-120 Ohm shielded cable (available at almost all pro lighting stores). Your cables should be made with a male XLR connector at one end and a female XLR connector the other. Also remember that DMX cable must be daisy chained and cannot be split.

**Special Note: Line Termination.** When longer runs of cable are used, you may need to use a terminator on the last unit to avoid erratic behavior. A terminator is a 110-120 ohm 1/4 watt resistor which is connected between pins 2 and 3 of a male XLR connector (DATA + and DATA -). This unit is inserted in the female XLR connector of the last unit in your daisy chain to terminate the line. Using a cable terminator (ADJ part number Z-DMX/T) will decrease the possibilities of erratic behavior.

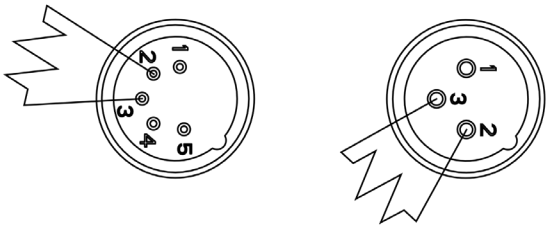


A DMX512 terminator reduces signal errors, avoiding most signal reflection interference. Connect PIN 2 (DMX-) and PIN 3 (DMX+) of the last fixture in series with a 120 Ohm, 1/4 W Resistor to terminate the DMX512.

**TO MAINTAIN IP65 RATING INTEGRITY AND PREVENT WATER FROM ENTERING THE FIXTURE, ALL CONNECTION RUBBER CAPS MUST BE SEALED WHEN NOT IN USE, AND ONLY IP65 RATED POWER AND DATA CABLES MUST BE USED.**

# DMX ADDRESSING

All fixtures should be given a DMX starting address when operating with a DMX controller, in order to ensure that the correct fixture responds to the correct control signal. This digital starting address is the channel number from which the fixture starts to “listen” to the digital control signal sent out from the DMX controller. This starting DMX address is assigned by setting the correct DMX address on the digital control display on the fixture.

You can set the same starting address for all fixtures or a group of fixtures, or set different addresses for each individual fixture. Setting all fixtures to the same DMX address will cause all fixtures to react in the same way. In this case, please note that changing the settings of one channel will affect all the fixtures simultaneously.

If you set each fixture to a different DMX address, each unit will start to “listen” to the channel number you have set, based on the quantity of DMX channels of each fixture. That means changing the settings of one channel will only affect the selected fixture.

As an example, when operating this fixture model in 11 channel mode, you should set the starting DMX address of the first unit to 1, the second unit to 12 (1 + 11), the third unit to 23 (1 + 11 + 11), and so on. Refer to the chart below for more details.

| Channel Mode | Unit 1 Addr | Unit 2 Addr | Unit 3 Addr | Unit 4 Addr |
|---|---|---|---|---|
| **11-Ch** | 1 | 12 | 23 | 34 |
| **14-Ch** | 1 | 15 | 29 | 43 |

# DMX TRAITS

| CHANNEL | | DMX VALUES | FUNCTION |
|---|---|---|---|
| 11CH | 14CH | | |
| 1 | 1 | 000 - 255 | **Pan Movement,** 0° to 540° |
| | 2 | 000 - 255 | **Pan Fine** |
| 2 | 3 | 000 - 255 | **Tilt Movement,** 0° to 270° |
| | 4 | 000 - 255 | **Tilt Fine** |
| 3 | 5 | | **Color Wheel** |
| | | 000 - 002 | Open / White |
| | | 003 - 004 | White + Red |
| | | 005 - 006 | Red |
| | | 007 - 008 | Red + Blue |
| | | 009 - 010 | Blue |
| | | 011 - 012 | Blue + Green |
| | | 013 - 014 | Green |
| | | 015 - 016 | Green + Yellow |
| | | 017 - 018 | Yellow |
| | | 019 - 021 | Yellow + Orange |
| | | 022 - 023 | Orange |
| | | 024 - 025 | Orange + Magenta |
| | | 026 - 027 | Magenta |
| | | 028 - 029 | Magenta + Light Blue |
| | | 030 - 031 | Light Blue |
| | | 032 - 033 | Light Blue + Light Yellow |
| | | 034 - 035 | Light Yellow |
| | | 036 - 037 | Light Yellow + Light Green |
| | | 038 - 039 | Light Green |
| | | 040 - 042 | Light Green + Purple |
| | | 043 - 044 | Purple |
| | | 045 - 046 | Purple + Pink |
| | | 047 - 048 | Pink |
| | | 049 - 050 | Pink + Medium Yellow |
| | | 051 - 052 | Medium Yellow |
| | | 053 - 054 | Medium Yellow + CTB |
| | | 055 - 056 | CTB |
| | | 057 - 058 | CTB + UV |
| | | 059 - 060 | UV |
| | | 061 - 063 | UV + White |
| | | 064 - 127 | Indexing |
| | | 128 - 189 | Clockwise Rotation, fast to slow |
| | | 190 - 193 | Stop Rotation |
| | | 194 - 255 | Counter-Clockwise Rotation, slow to fast |

# DMX TRAITS

| CHANNEL | | DMX VALUES | FUNCTION |
|---|---|---|---|
| 11CH | 14CH | | |
| 4 | 6 | | **Gobo Wheel** |
| | | 000 - 003 | Open |
| | | 004 - 007 | Gobo 1 |
| | | 008 - 011 | Gobo 2 |
| | | 012 - 015 | Gobo 3 |
| | | 016 - 019 | Gobo 4 |
| | | 020 - 023 | Gobo 5 |
| | | 024 - 027 | Gobo 6 |
| | | 028 - 031 | Gobo 7 |
| | | 032 - 035 | Gobo 8 |
| | | 036 - 039 | Gobo 9 |
| | | 040 - 043 | Gobo 10 |
| | | 044 - 047 | Gobo 11 |
| | | 048 - 051 | Gobo 12 |
| | | 052 - 055 | Gobo 13 |
| | | 056 - 059 | Gobo 14 |
| | | 060 - 063 | Gobo 15 |
| | | 064 - 068 | Gobo 1 Shake |
| | | 069 - 072 | Gobo 2 Shake |
| | | 073 - 076 | Gobo 3 Shake |
| | | 077 - 080 | Gobo 4 Shake |
| | | 081 - 084 | Gobo 5 Shake |
| | | 085 - 089 | Gobo 6 Shake |
| | | 090 - 093 | Gobo 7 Shake |
| | | 094 - 097 | Gobo 8 Shake |
| | | 098 - 101 | Gobo 9 Shake |
| | | 102 - 105 | Gobo 10 Shake |
| | | 106 - 110 | Gobo 11 Shake |
| | | 111 - 114 | Gobo 12 Shake |
| | | 115 - 118 | Gobo 13 Shake |
| | | 119 - 122 | Gobo 14 Shake |
| | | 123 - 127 | Gobo 15 Shake |
| | | 128 - 189 | Counter-Clockwise Rotation, fast to slow |
| | | 190 - 193 | Stop Rotation |
| | | 194 - 255 | Clockwise Rotation, slow to fast |
| 5 | 7 | | **Prism (16 Facet Circular)** |
| | | 000 - 007 | Close |
| | | 008 - 255 | Open |

# DMX TRAITS

| CHANNEL | | DMX VALUES | FUNCTION |
|---|---|---|---|
| 11CH | 14CH | | |
| 6 | 8 | | **Rotating Prism** |
| | | 000 - 127 | Indexing |
| | | 128 - 189 | Counter-Clockwise Rotation, fast to slow |
| | | 190 - 193 | Stop Rotation |
| | | 194 - 255 | Clockwise Rotation, slow to fast |
| 7 | 9 | | **Shutter & Strobing** |
| | | 000 - 031 | Shutter Closed |
| | | 032 - 063 | Shutter Open |
| | | 064 - 095 | Strobing, slow to fast |
| | | 096 - 127 | Shutter Open |
| | | 128 - 159 | Pulse Effect in Sequences |
| | | 160 - 191 | Shutter Open |
| | | 192 - 223 | Random Strobing, slow to fast |
| | | 224 - 255 | Shutter Open |
| 8 | 10 | 000 - 255 | **Dimmer,** 0% to 100% |
| | 11 | 000 - 255 | **Dimmer Fine** |
| 9 | 12 | 000 - 255 | **Frost,** 0% to 100% |
| 10 | 13 | 000 - 255 | **Pan/Tilt Movement Speed,** fast to slow |
| 11 | 14 | | **Special Functions** |
| | | 000 - 069 | No Function |
| | | 070 - 079 | Enable Blackout with Pan/Tilt Movement |
| | | 080 - 089 | Disable Blackout with Pan/Tilt Movement |
| | | 090 - 099 | Enable Blackout with Color Change |
| | | 100 - 109 | Disable Blackout with Color Change |
| | | 110 - 119 | Enable Blackout with Gobo Change |
| | | 120 - 129 | Disable Blackout with Gobo Change |
| | | 130 - 139 | Lamp On |
| | | 140 - 149 | Reset Pan/Tilt Motors |
| | | 150 - 159 | Reset Effect Motor |
| | | 160 - 199 | No Function |
| | | 200 - 209 | Reset All Motors |
| | | 210 - 229 | No Function |
| | | 230 - 239 | Lamp Off |
| | | 240 - 255 | No Function |

# DIMMER CURVES AND MODES

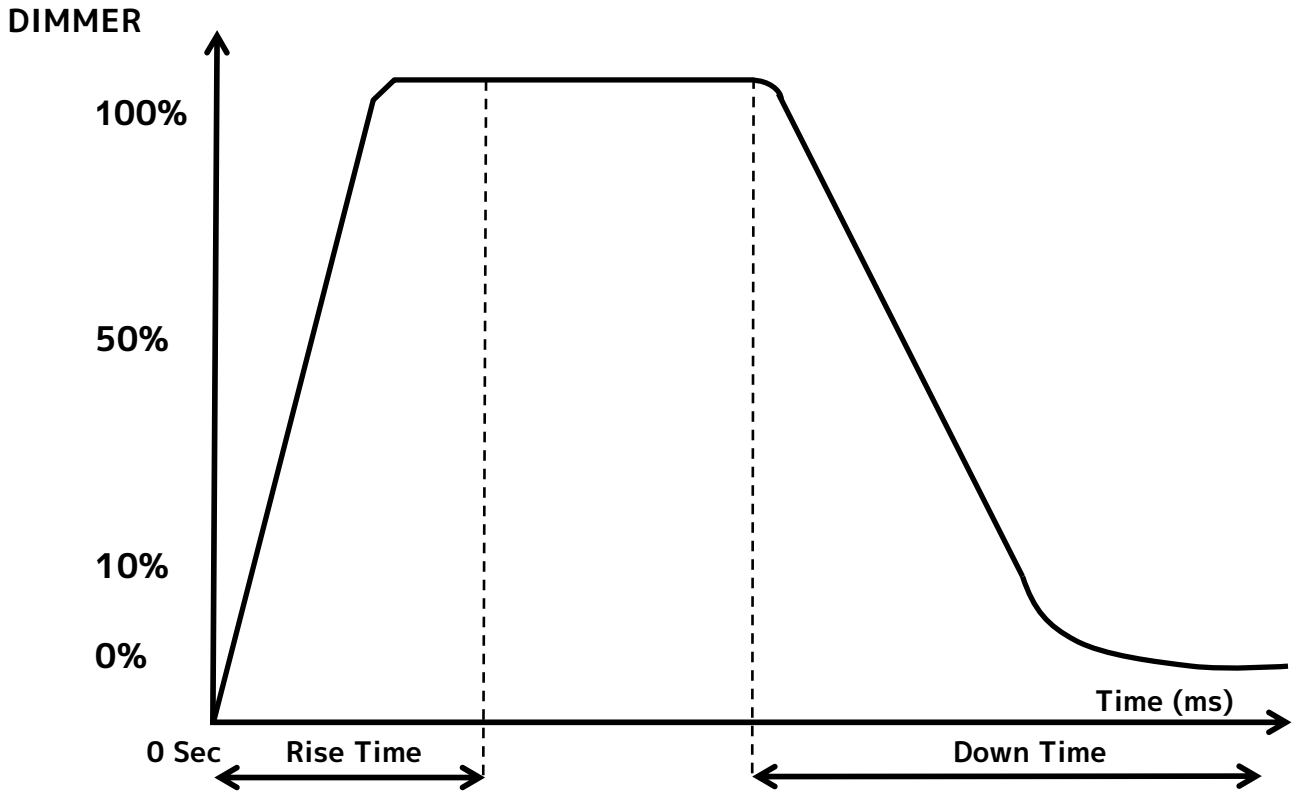


| Dimming Curve Ramp Effect | 0 sec Fade Time | | 1 sec Fade Time | |
|---|---|---|---|---|
| | Rise Time (ms) | Down Time (ms) | Rise Time (ms) | Down Time (ms) |
| **Standard (default)** | 0 | 0 | 0 | 0 |
| **Stage** | 780 | 1100 | 1540 | 1660 |
| **TV** | 1180 | 1520 | 1860 | 1940 |
| **Architectural** | 1380 | 1730 | 2040 | 2120 |
| **Theatre** | 1580 | 1940 | 2230 | 2280 |
| **Stage 2** | 0 | 1100 | 0 | 1660 |

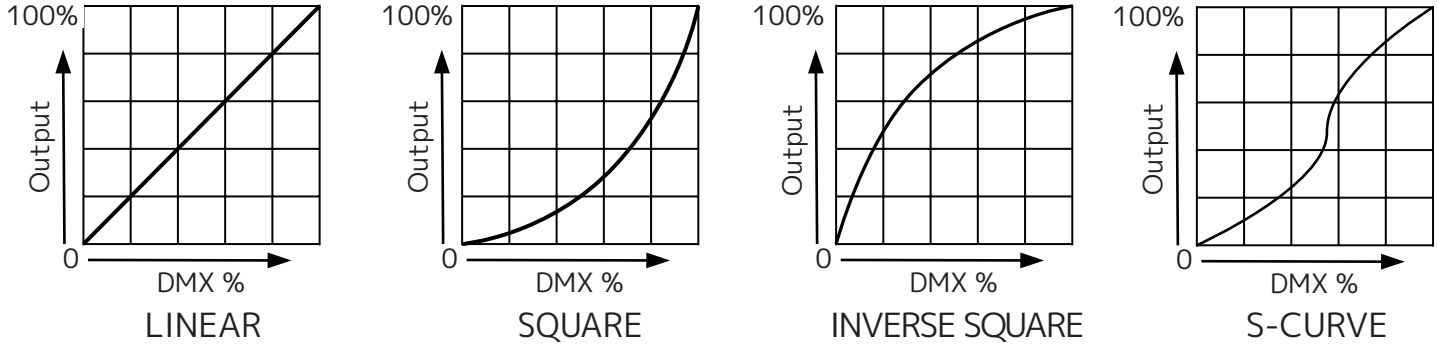

# ERROR CODES

| Number | Print Error Message |
|---|---|
| 1 | Lamp Hot Power Off |
| 2 | CPU-B Error |
| 3 | CPU-C Error |
| 4 | Pan Reset Error |
| 5 | Pan Encoder Error |
| 6 | Tilt Reset Error |
| 7 | Tilt Encoder Error |
| 8 | Color Reset Error |
| 9 | Gobo Reset Error |
| 10 | Lamp Fan 1 Start Errors |
| 11 | Lamp Fan 1 Stop Errors |
| 12 | Head Fan 1 Start Errors |
| 13 | Head Fan 1 Stop Errors |
| 14 | Head Fan 2 Start Errors |
| 15 | Head Fan 2 Stop Errors |
| 16 | Head Fan 3 Start Errors |
| 17 | Head Fan 3 Stop Errors |
| 18 | Head Fan 4 Start Errors |
| 19 | Head Fan 4 Stop Errors |
| 20 | Base Fan 1 Start Errors |
| 21 | Base Fan 1 Stop Errors |
| 22 | Base Fan 2 Start Errors |
| 23 | Base Fan 2 Stop Errors |

# MULTIPLE POWER LINKING

This feature allows the fixtures to be connected to one another using the power cable input and output sockets.

**The maximum number of units that can be linked in this manner is as follows:**

- **6 units max @ 120V**
- **12 units max @ 240V**

**Use caution when power linking fixtures of other make and model types, as the power consumption of other model fixtures may exceed that maximum power output on this fixture. Consult your unit's silk screen for maximum amps.**

# CLEANING

**DISCONNECT POWER BEFORE PERFORMING ANY MAINTENANCE!**

**CLEANING**

Due to fog residue, smoke, and dust, cleaning the internal and external optical lenses must be carried out periodically to optimize light output.

- Use normal glass cleaner and a soft cloth to wipe down the outside casing.
- Clean the external optics with glass cleaner and a soft cloth every 20 days.
- Always be sure to dry all parts completely before plugging the unit back in.

Cleaning frequency depends on the environment in which the fixture operates (i.e. smoke, fog residue, dust, dew).

# SPECIFICATIONS

**Light Source:**
Lamp: Osram Sirius HRI 100W Long Life (6,000 hrs.)
Discharge Color Temperature : 9000K
CRI: 60
Beam Angle: 3-degrees

**Features:**
IP65 rated – protects from dust, sand, moisture, liquid
Independent frost filter (wash effect)
0-100% smooth dimming
Various strobe speeds
Includes omega brackets
Wifly EXR wireless DMX
Antenna Range: 98.42ft (30m)

**Color Wheel:**
12 colors + CTB & UV + open

**GOBO Wheel:**
1 metal GOBO Wheel with 11 GOBOs, 4 GOBO reducers + open

**Prism Wheel:**
16-facet circular prism (rotates in either direction)

**Construction:**
Display: OLED display
Data In/Out: 5-pin DMX IP65 (with rubber protective covers over connections)
Power In/Out: locking IP65 (with rubber protective covers over connections)
Protection Rating: IP65
All metal case design

**Control:**
2 DMX Channel Modes: 11/14 Channels
Control Mode: DMX512, RDM (Remote Device Management)
Firmware Upgrade: Update via IP65 USB port (with rubber protective covers over connections)
With Wired Digital Communication Network

**Pan/Tilt:**
Pan/Tilt: 540/270

**Electrical:**
Power voltage: AC100-240V, 50/60Hz (Multi-voltage)
Power Linking: 6 units @ 120V; 12 units @ 240V
Power consumption: 235W max
Min/Max Ambient Temperature: -10°C ~ 40°C

**Dimensions & Weight:**
Dimension (LxWxH): 13.2”x 8.3” x 16.9” / 336 x 210 x 430mm
Weight: 36 lbs. / 16.3kg.

**Operating Temperature:**
Minimum operating temperature: 14°F (-10C)
Maximum operating temperature: 113°F (45C)

**Approvals:**
cETLus Approved (Control #4000358)

Intertek
4000358

Specifications and documentation subject to change without notice.
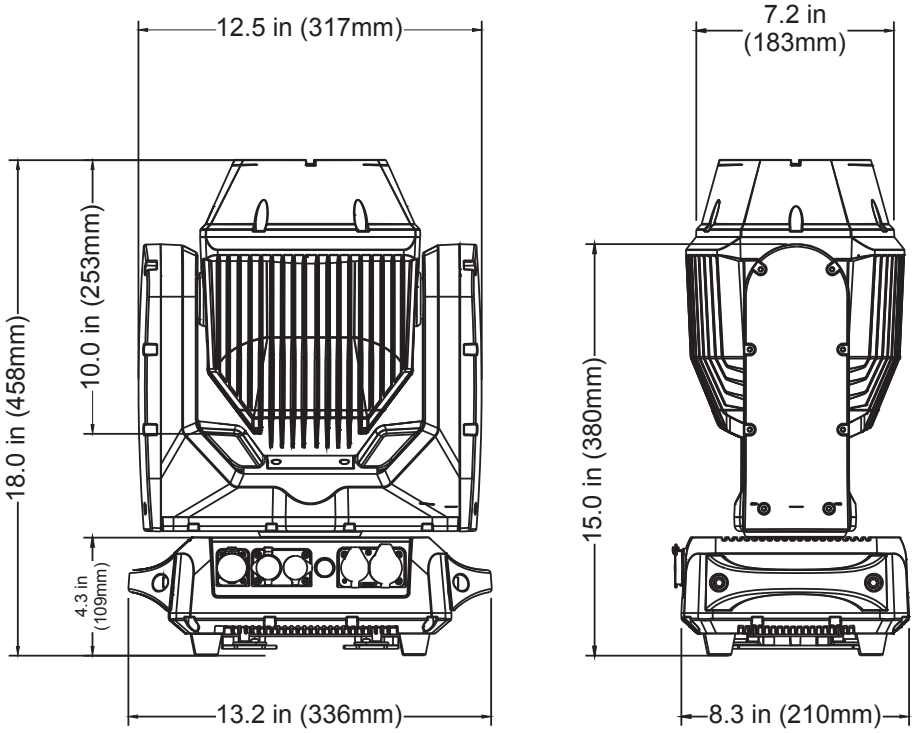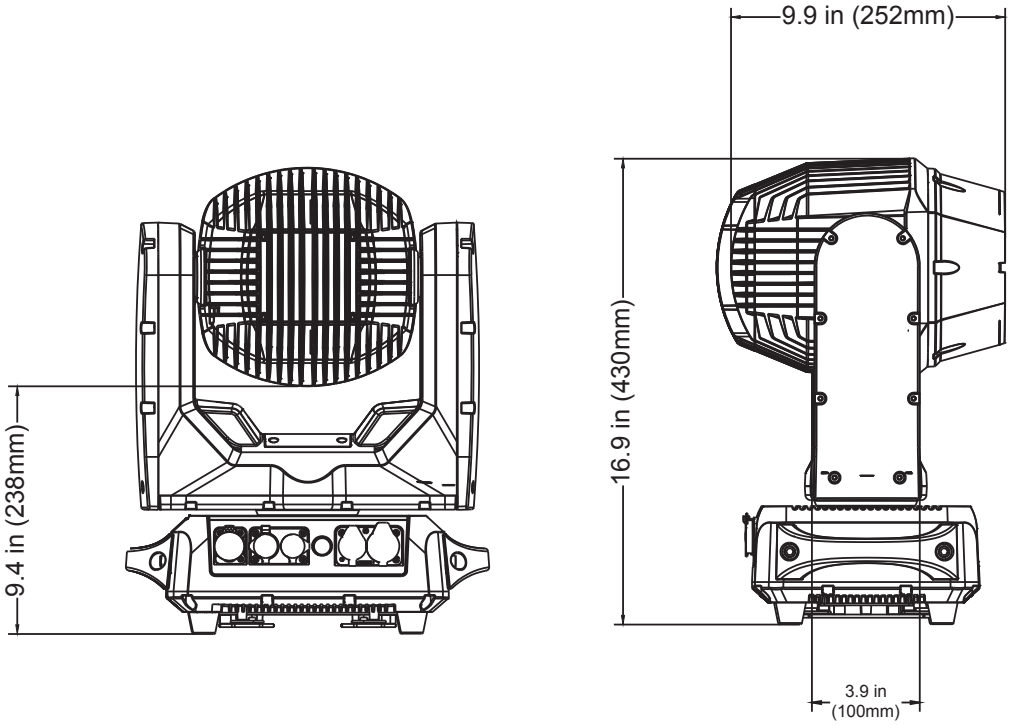
# DIMENSIONAL DRAWINGS