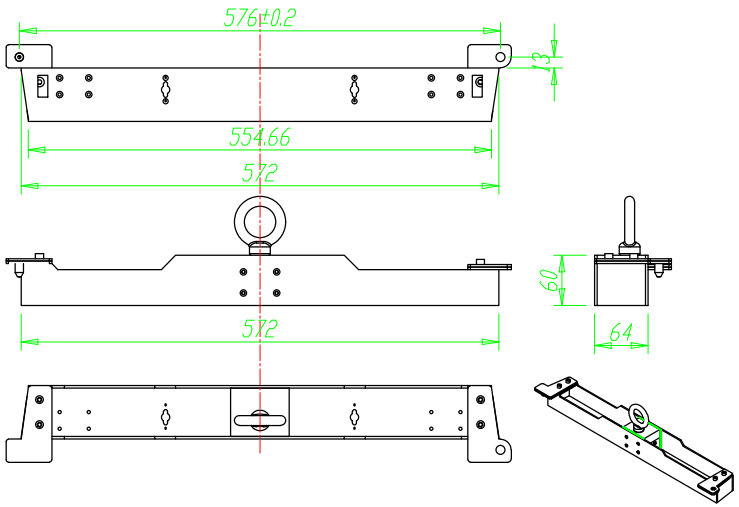

EPTSIP	Single Rigging Bar
ELATION	

mm	
0.X	±0.02
X	±0.02
XX	±0.1
XXX	±0.2
XXXX	±0.5
ANGLE	±0.5

REV 1.0